DC POWER SUPPLY

POWER STATION pe3000-5

plating electronic
we care for power

Output power:	**1200 - 10000 Watts**			**Typical applications:**	Laboratory plating lines
DC current:	**300 - 800 A (max. 800 A / 10 V)**			Precious metal plating	Reel-to-reel plating
DC voltage:	**4 - 30 V (max. 1000 V / 10 A)**			PCB lines	Manual plating lines

DC power supply with switch mode technology, designed for use in electroplating and/or for installation in a cabinet.

POWER STATION pe3000-5, front view

POWER STATION pe3000-5, back view

Characteristic values

- Linearity inaccuracy < 1 %
- Ripple less than < 1 %
- Efficiency typical > 85 %
- Powerfactor cos φ 0,95
- Constant current and voltage control
- Soft start function
- Over temperature protection
- Internal shunt with 60 mV at I_{nenn}
- Pulse operation optional
- Mains supply: standard 3 x 400 V +/- 10 % / 50-60 Hz without N (other voltages on request)

Cooling

- Optimized cooling air guiding, air consumption max. 360m³/h
- Cooling air outlet at the black air grids (turned air flow on request)
- Ambient temperature 35°C (other on request)

Design

- Stainless steel casing, optional coated, protection grade IP20
- DC connection via screw terminals or tin plated copper bus bars
- High voltage proof DC terminals (above 60 V)

EMV: EN50011 class A, group B ; EN61000-6-4 and EN61000-6-2;
CE-conformity low voltage guide line: EN50178

Values	Standard sizes – DC output[1]												[1]other sizes on request
DC current	800 A					700 A	600 A	500 A	400 A	300 A			10 A
DC voltage	4 V	5 V	6 V	8 V	10 V	12 V	15 V	18 V	20 V	24 V	30 V		1000 V
Mains supply	3 x 400 V AC												
Weight	ca. 45 kg												

plating electronic GmbH | 79211 Denzlingen | Fon +49 7666 9009-0 | www.plating.de
Marie-Curie-Straße 6 | Germany | Fax +49 7666 9009-44 | info@plating.de

Standard dimensions

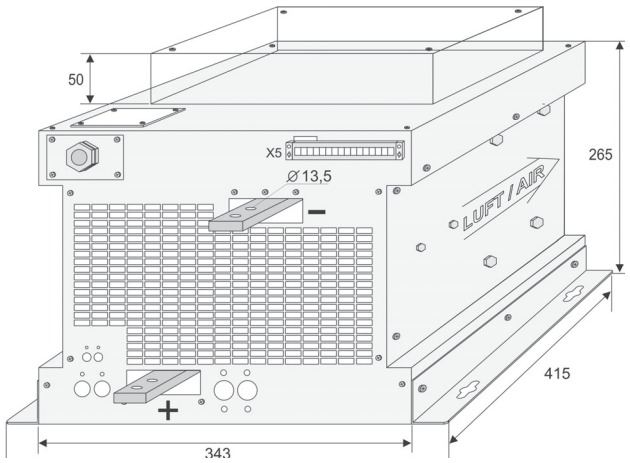

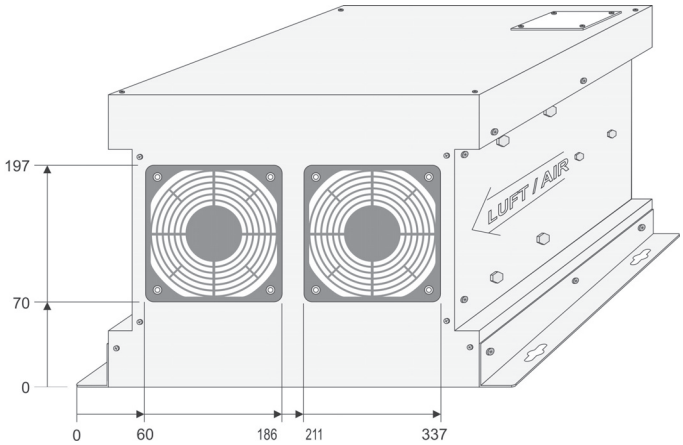

Control

Analog signals Iset, Uset, Iact, Uact = 0-10 V

Control optional available (with raised casing)

Analog signals galvanically isolated via isolation amplifier:
0-10V, 4-20mA, 0-20mA (other on request), X4-terminal

Serial interface RS485: X6 and X7 terminal

Control unit pe280 for the controlling of DC power supplies of the series POWER STATION pe3000

Designed for electroplating applications

Large 3-line LCD-display, polycarbonate-keypad for easy operation

Current and voltage infinitely adjustable by UP / DOWN buttons

Current and voltage preset

Ampere-hour counter (totalizer)

Protection grade: IP54

Ambient temperature max. 40°C

Optional available functions

Preset counter, dosage counter *

Ramp function (start / stop ramp)

Timer function for ON / OFF *

Voltage / current alarm *

Operating hours counter

Chopper timer (pulse-capable rectifier type requested)

Pole changer function (mechanical / electronic) *

Programmable DC steps (14 individual steps) *

Extern ON

* Indication / alarm output

Control via: RS485, PROFIBUS, TCP/IP (other on request)

Technical equipment, design and features: suject to change! For further information please contact plating electronic GmbH.

plating electronic GmbH | 79211 Denzlingen | Fon +49 7666 9009-0 | www.plating.de
Marie-Curie-Straße 6 | Germany | Fax +49 7666 9009-44 | info@plating.de

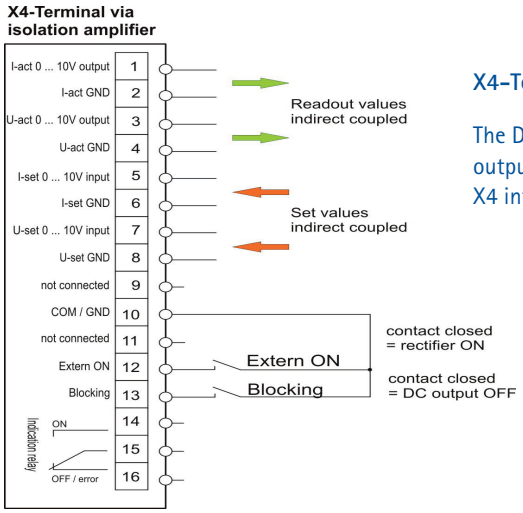

X4-Terminal

The DC power supplies of the POWER STATION series with analog output signals and isolation amplifier are equipped with the analog X4 interface.

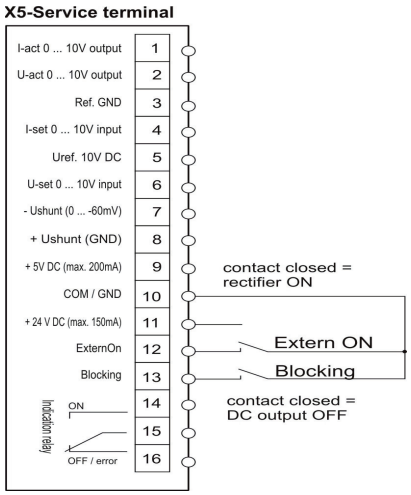

X5-Service terminal

All standard analog DC power supplies of the POWER STATION series pe3000, 19" rack-mount units and the pe5000 cabinets are equipped with the X5-Terminal, called „Service terminal"

The standard 16pin terminal contains all control signals of the power supply (except; optional SENSE measuring input).

The POWER STATIONS are always delivered with the plug component to the 16pin X5-Terminal, connector casing and strain relief included.

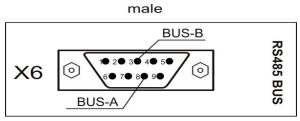

BUS input

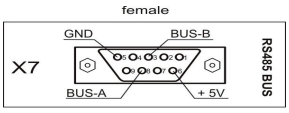

BUS output

X6-Terminal

Serial interface RS485

X7-Terminal

Serial interface RS485

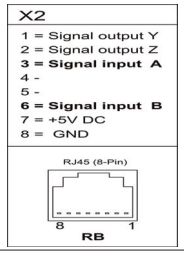

X2-RJ45 connector for peRB (for digital controlled POWER STATIONS)

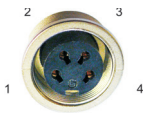

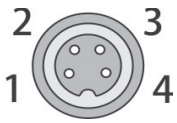

Pin assignment of shunt connector on the back panel

1. + Ushunt (GND)
2. Shield
3. Shield
4. - Ushunt (0 ... 60mV)

view from outside!

Technical equipment, design and features: suject to change! For further information please contact plating electronic GmbH.